PARTS LIST

NECCHI

K432A
K417A

N300K7Q01
Jan. 25, 2019

PLEASE NOTE:
The parts mentioned without number in the parts list are not available.
Take care the parts for the model and the voltage application & spec. you need.

~ LIST OF CONTENTS ~

A. PRINCIPAL COVER COMPONENTS 1

B. PRINCIPAL COVER COMPONENTS 2

C. UPPER SHAFT COMPONENTS

D. PATTERN CONTACT MECHANISM

E. PATTERN CAM MECHANISM

F. PATTERN SELECTION COMPONENTS

G. BOBBIN WINDER & THREAD TENSION

H. NEEDLE BAR & PRESSER MECHANISM

I. ZIGZAG MECHANISM

J. BH MECHANISM & NEEDLE PLATE COMPONENTS

K. FEED MECHANISM

L. HOOK & LOWER SHAFT COMPONENTS

M. MOTOR, POWER SUPPLY & ELECTRONIC PARTS

N. ACCESSORIES (STANDARD)

A. PRINCIPAL COVER COMPONENTS 1

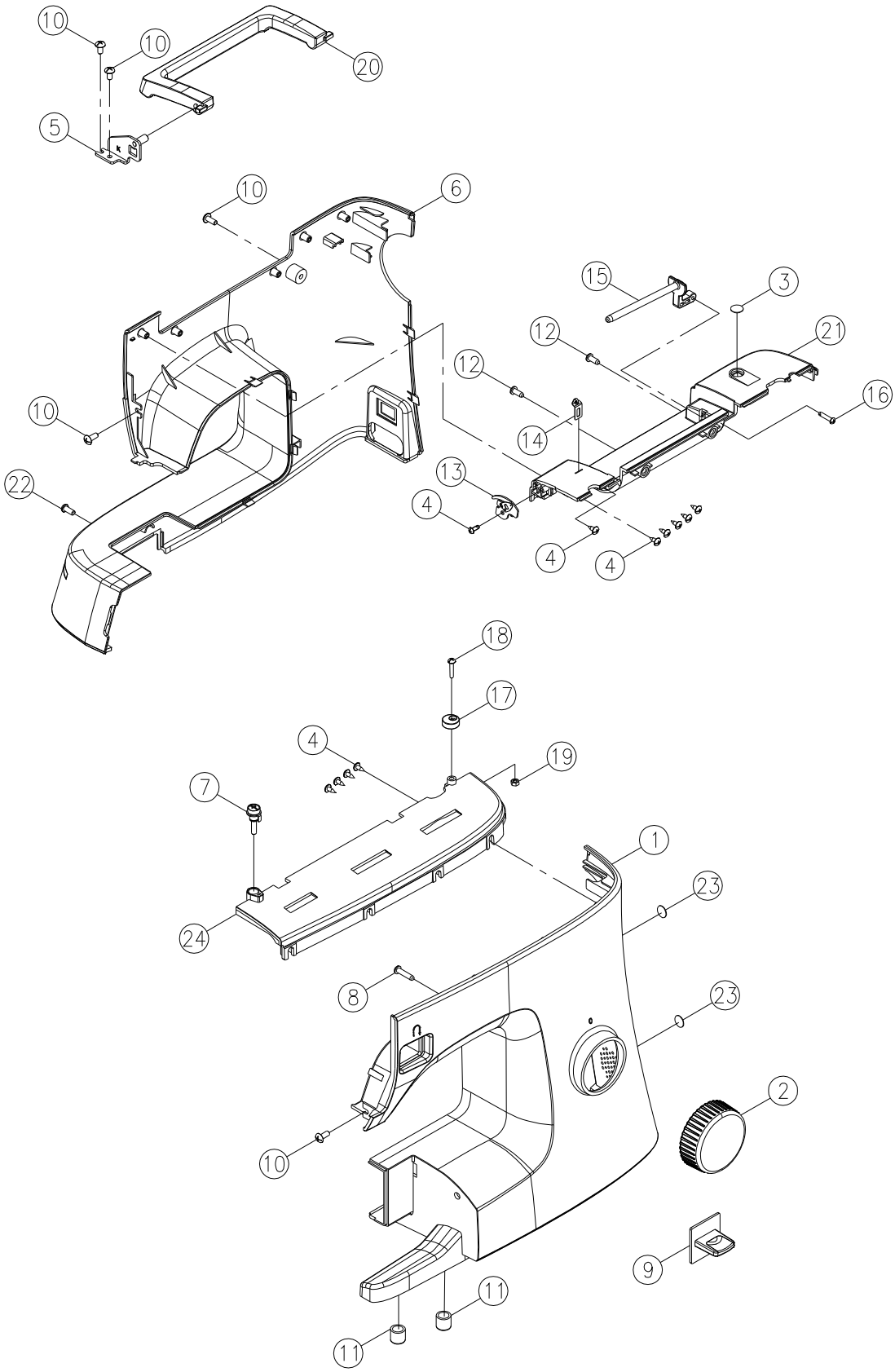

A. PRINCIPAL COVER COMPONENTS 1

NO.	PART NO.	DESCRIPTION	REMARK
1	K0QC013210	FRONT COVER	
2	K7QD013186	PATTERN DIAL	FOR K432A
	K3QD013202	PATTERN DIAL	FOR K417A
3			
4	004230216	SET SCREW (M3x8.5)	
5	K5L0035000	FRONT DECORATED PLATE	
6	K7QZ023210	BACK COVER	
7	K6A1284000	BOBBIN WINDER THREAD GUIDE CPL.	
8	004240186	SET SCREW (M4x15 B)	
9	K7QZ183186	REVERSE BUTTON	FOR K432A
	K7QZ183202	REVERSE BUTTON	FOR K417A
10	004240106	SET SCREW (M4x8 A)	
11	K6A0063002	FREE ARM BASE CUSHION	
12	004240306	SET SCREW (M4x10 B)	
13	K6E0265000	THREAD GUIDE CPL.	
14	H1B0603001	THREAD GUIDE	
15	E9R0673210	SPOOL PIN BASE	
16	004230646	SET SCREW (M3x16.7 B)	
17	K6B0393000	BOBBIN WINDER	
18	004106162	SET SCREW (9/64x40x16)	
19	004706013	NUT (9/64x40 t=3)	
20	K7QZ113186	HANDLE	FOR K432A
	K7QZ113202	HANDLE	FOR K417A
21	K6QA043186	TOP COVER (BACK)	FOR K432A
	K6QA043202	TOP COVER (BACK)	FOR K417A
22	004241046	SET SCREW (M4x10 A)	
23	V61503210	PLATE STICKER	
24	K6QA053186	TOP COVER (FRONT)	FOR K432A
	K3QA013202	TOP COVER (FRONT)	FOR K417A

PREFISSO "ZS"
PREFISSO "ZS"

B. PRINCIPAL COVER COMPONENTS 2

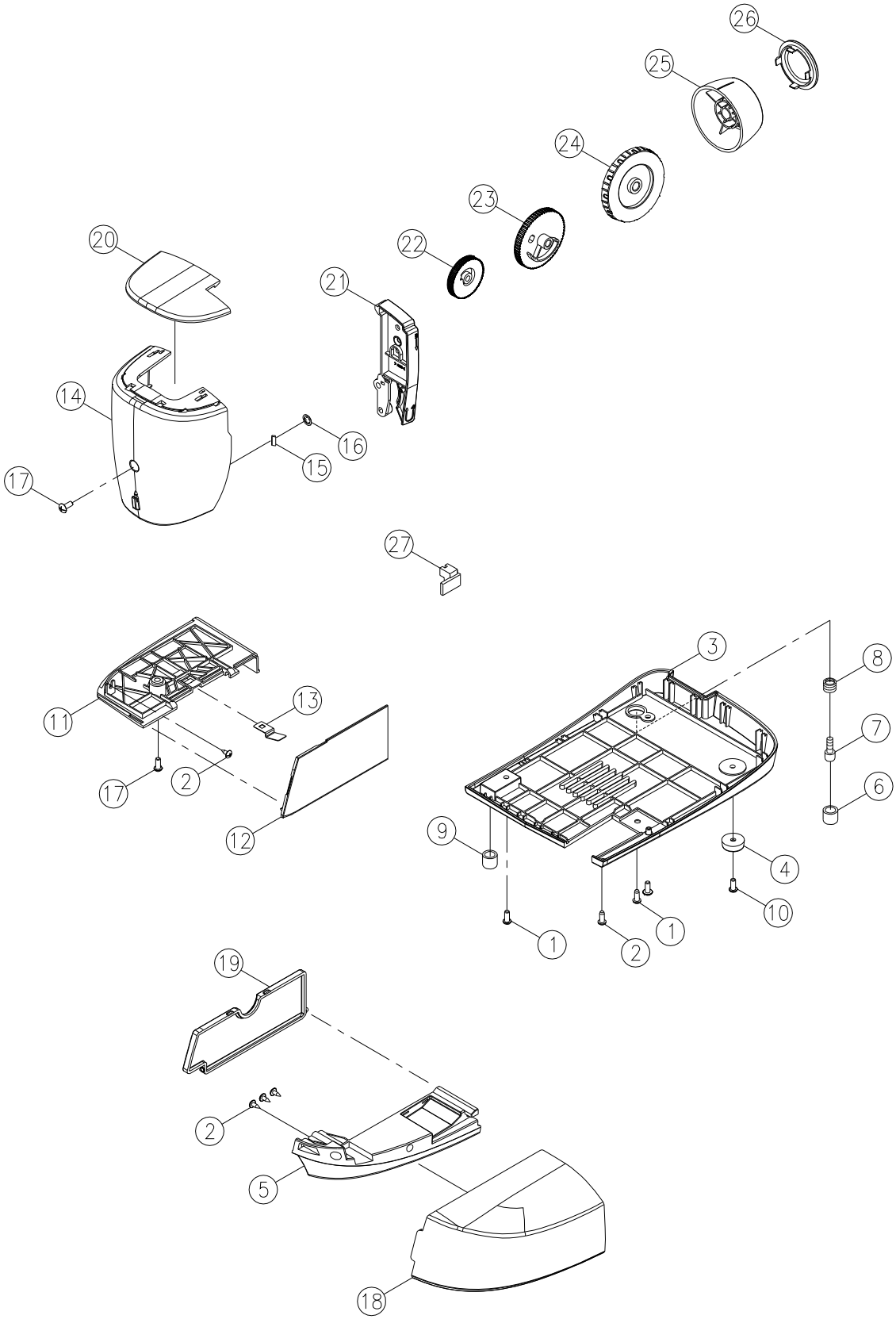

B. PRINCIPAL COVER COMPONENTS 2

NO.	PART NO.	DESCRIPTION	REMARK
1	004240106	SET SCREW (M4x8 A)	
2	004230216	SET SCREW (M3x8.5)	
3	K7QZ143186	CORD REEL COVER	FOR K432A
	K7QZ143202	CORD REEL COVER	FOR K417A
4	J31413002	FREE ARM BASE CUSHION RUBBER	
5	K7QZ073186	ACCESSORY TABLE BASE	FOR K432A
	K7QZ073202	ACCESSORY TABLE BASE	FOR K417A
6	E1A2503002	FREE ARM BASE CUSHION RUBBER	
7	K82133006	BASE PLATE ADJUSTMENT SCREW	
8	K82073003	BASE PLATE ADJUSTMENT SCREW SPRING	
9	K6A0063002	FREE ARM BASE CUSHION	
10	0042400286	SET SCREW (M4x10 A)	
11	K7QZ133210	BED COVER	
12	K7QZ123210	HOOK COVER	
13	R12453002	HOOK COVER SPRING	
14	K6QF013210	FACE PLATE	
15	V630593000	CUTTER	
16	003020053	CS-RING (CSTW-5)	
17	004241046	SET SCREW (M4x10 A)	
18	K7QZ083210	SEWING TABLE	
19	K7QZ093210	SEWING TABLE BODY COVER	
20	K6QF033186	FACE PANEL	FOR K432A
	K6QF033202	FACE PANEL	FOR K417A
21	K7QZ103186	DIAL TENSION SUPPORTER PLATE COVER	FOR K432A
	K7QZ103202	DIAL TENSION SUPPORTER PLATE COVER	FOR K417A
22	H1KD013210	DIAL TENSION KNOB	
23	K7PW013210	ZIGZAG WIDTH DIAL	FOR K432A
24	K6QR023210	FEED REGULATOR DIAL	FOR K432A
	K3QR013210	FEED REGULATOR DIAL	FOR K417A
25	K6QA063186	HAND WHEEL	FOR K432A
	K6QA063202	HAND WHEEL	FOR K417A
26	K7QZ173210	HAND WHEEL COVER	
27			

PREFISSO "ZS"
PREFISSO "ZS"

C. UPPER SHAFT COMPONENTS

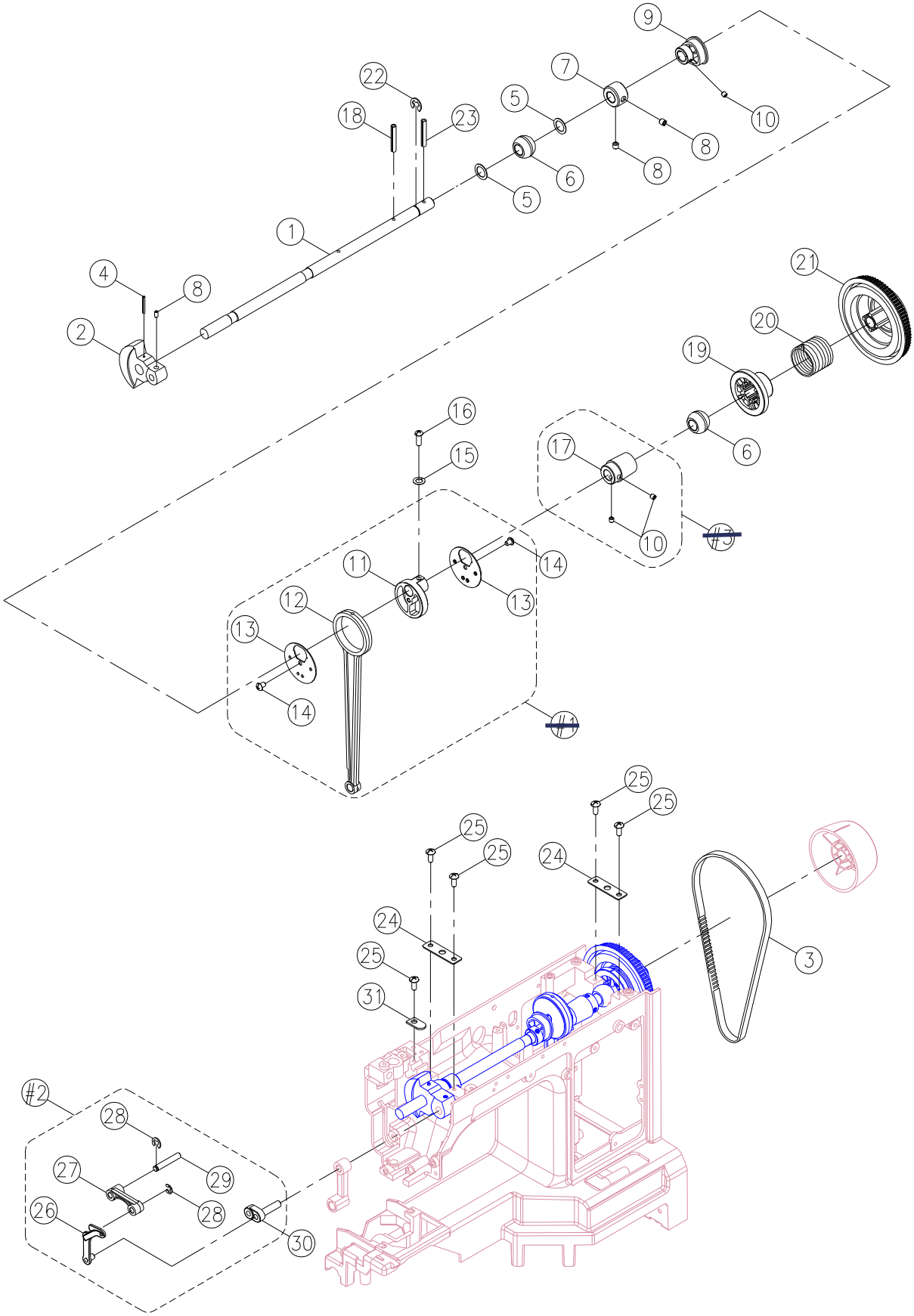

C. UPPER SHAFT COMPONENTS

NO.	PART NO.	DESCRIPTION	REMARK
1	K6D0203000	ARM SHAFT	
2	V61473000	ARM SHAFT BALANCE	
3	007158XXL5	BELT	
4	003043524	ARM SHAFT BALANCE PIN (3.5x24)	
5	004400080	ENDURE ATTRITION WASHER (10.2x15x0.5)	
6	R10293000	ARM SHAFT BUSING	
7	R10313000	ARM SHAFT COLLAR	
8	004250203	SET SCREW (M5x5 C)	
9	G4A0533000	FEED CAM	
10	004240503	SET SCREW (M4x4 C)	
11	V880603003	CRANK CONNECTING ROD CAM	
12	V880213000	CRANK CONNECTING ROD	
13	V880613003	CRANK CONNECTING ROD COVER	
14	0042400012	SET SCREW (M4x4 B)	
15	004600026	WASHER (4.2x7.2x1.2)	
16	004107063	SET SCREW (11/64x40x12)	
17	K6A1465000	ARM SHAFT WORM COMPLETE	
18	003043028	SPRING PIN (3x28)	
19	D5A0583000	CLUTCH SLEEVE	
20	D5A0573003	ARM SHAFT CLUTCH ANNULUS SPRING	
21	D5A0563000	ARM SHAFT DRIVER BELT PULLEY	
22	003010082	E-RING (ETW-8)	
23	003043030	SPRING PIN (3x30)	
24	V60113003	ARM SHAFT BUSHING HOLDER PLATE	
25	004240106	SET SCREW (M4x8 A)	
26	E1A2513001	THREAD TAKE UP LEVER	
27	V10523000	THREAD TAKE UP LEVER SUPPORTER	
28	003010043	E-RING (ETW-4)	
29	V60223003	THREAD TAKE UP LEVER SUPPORTER SHAFT	
30	V10543000	ARM SHAFT BALANCE PIN	
31	H13093003	CARRYING HANDLE PLATE	
~~#1~~	~~V880214000~~	~~CRANK CONNECTING ROD CPL.~~	
#2	E1A2534000	THREAD TAKE UP LEVER CPL.	
~~#3~~	~~K6A0045000~~	~~ARM SHAFT WORM~~	

PREFISSO "ZS"

PREFISSO "ZS"

D. PATTERN CONTACT MECHANISM

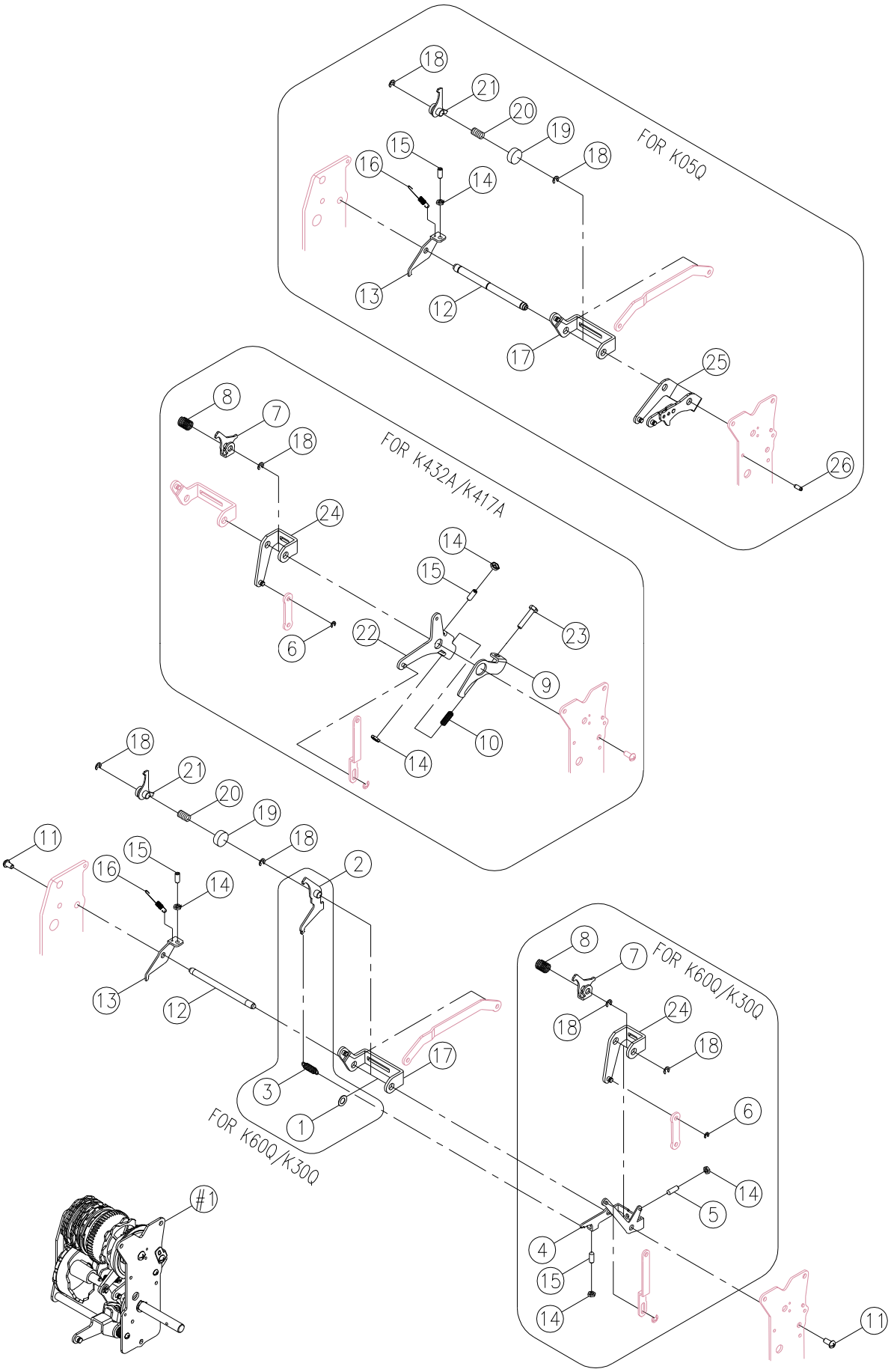

D. PATTERN CONTACT MECHANISM

NO.	PART NO.	DESCRIPTION	REMARK
1			
2			
3			
4			
5			
6	003010036	E-RING (ETW-3)	
7	K6A0443003	SS CAM CONTACT	
8	V60773003	SS CAM CONTACT SPRING	
9	Q6A5043003	BH FEED CRANK	
10	V60813003	BH SPRING	
11	004230016	SET SCREW (M3x6 A)	
12	K6A0383000	ZIGZAG CAM CONTACT SUPPORTER SHAFT	
13	K6A0423003	ZIGZAG RELEASE PLATE	
14	004840106	NUT (ALN-4)	
15	004241093	SET SCREW (M4x0.7 L9)	
16	K6A0883003	ZIGZAG RELEASE PLATE SPRING	
17	K6A0393003	ZIGZAG CAM CONTACT SUPPORTER	
18	003010056	E-RING (ETW-5)	
19	K6B0053006	SPRING PEDESTAL	
20	K6A0373003	ZIGZAG CAM CONTACT SPRING	
21	K6A0403003	ZIGZAG CAM CONTACT	
22	Q6A5033003	FEED ADJUST CRANK	
23	004240706	SET SCREW (M4x20)	
24	K6A0433003	SS CAM CONTACT SUPPORTER	
25			
26	003043008	SPRING PIN (3x8x0.6)	
#1	K7Q0044000	PATTERN CAM CONTACT CPL.	FOR K432A
	K3Q0024000	PATTERN CAM CONTACT CPL.	FOR K417A

PREFISSO "ZS"

PREFISSO "ZS"

E. PATTERN CAM MECHANISM

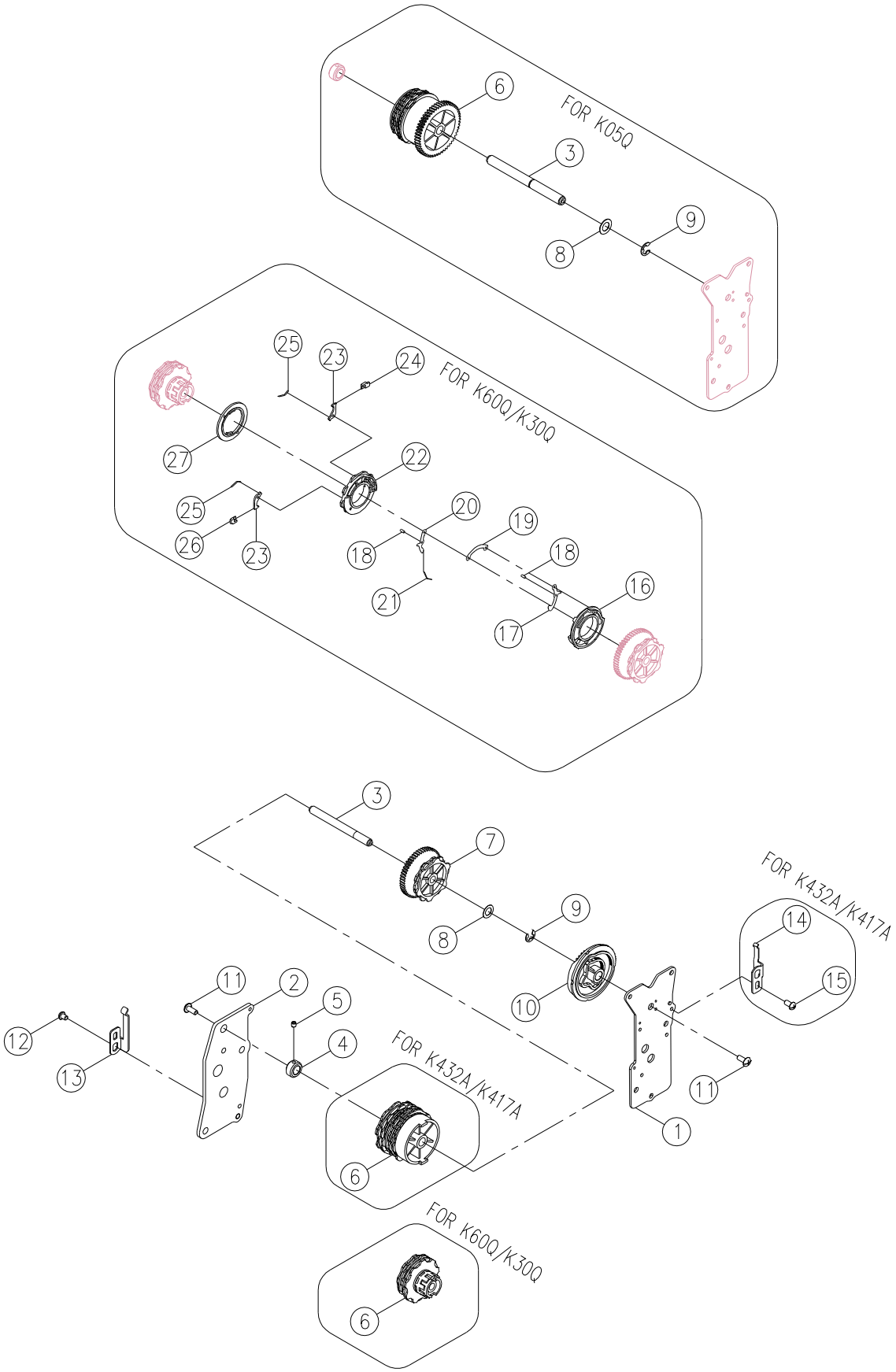

E. PATTERN CAM MECHANISM

NO.	PART NO.	DESCRIPTION	REMARK
1	Q6A0193003	PATTERN CAM CONTACT PLATE (FRONT)	
2	K6A0223003	PATTERN CAM CONTACT PLATE (BACK)	
3	K6A0233003	PATTERN CAM SHAFT	
4	H11943003	PATTERN CAM SHAFT COLLAR	
5	004240503	SET SCREW (M4x4 C)	
6	Q6A5023000	PATTERN CAM	
7	K6A0253000	SS CAM	
8	004300226	WASHER (8.2x16x1.0)	FOR K432A
	004300863	WASHER (8.2x14x0.5)	FOR K417A
9	003010063	E-RING (ETW-6)	
10	K6A0243000	FEED REGULATOR CAM	
11	004240106	SET SCREW (M4x8 A)	
12	004240676	SET SCREW (M4x5 B)	
13	P3A0883003	PATTERN FIX SPRING PLATE	
14	K6E0413003	FEED REGULATOR FIX PLATE	
15	0042400012	SET SCREW (M4x4 B)	
16			
17			
18			
19			
20			
21			
22			
23			
24			
25			
26			
27			

PREFISSO "ZS"
PREFISSO "ZS"

F. PATTERN SELECTION COMPONENTS

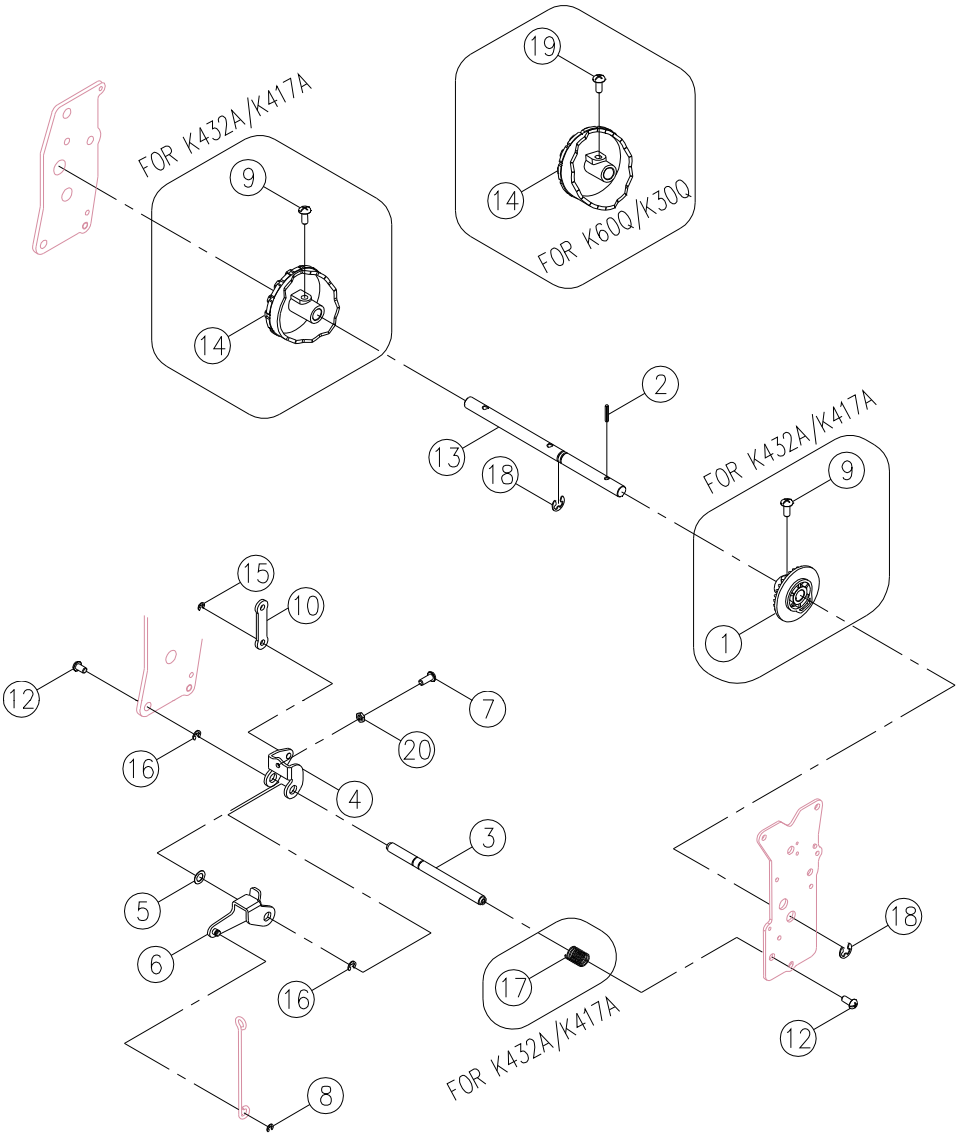

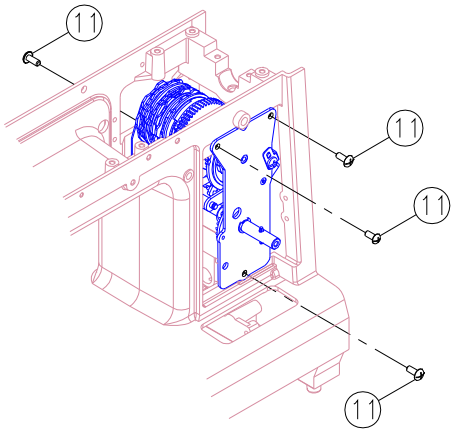

F. PATTERN SELECTION COMPONENTS

NO.	PART NO.	DESCRIPTION	REMARK
1	K7P0033582	BH PATTERN SELECTOR CAM	FOR K432A
	Q6A5073000	BH PATTERN SELECTOR CAM	FOR K417A
2	003042516	SPRING PIN (2.5x16)	
3	K6A0533000	FEED CRANK SHAFT	
4	K6A0523003	FEED ADJUSTING CRANK	
5	004300113	WASHER (6.7x14x0.8)	
6	K6A0513003	CRANK SHAFT	
7	004240046	SET SCREW (M4x10 B)	
8	003010046	E-RING (ETW-4)	
9	004240396	SET SCREW (M4x10)	
10	K6A0453003	FEED ROCK SHAFT	
11	004240106	SET SCREW (M4x8 A)	
12	004230016	SET SCREW (M3x6 A)	
13	K6D0173003	PATTERN SELECTOR CAM SHAFT	
	K4D5033003	PATTERN SELECTOR CAM	FOR K417A
14	K7P0023000	PATTERN SELECTOR CAM	FOR K432A
	K4D5023000	PATTERN SELECTOR CAM	FOR K417A
15	003010036	E-RING (ETW-3)	
16	003010056	E-RING (ETW-5)	
17	V60773003	SS CAM CONTACT SPRING	
18	003010063	E-RING (ETW-6)	
19			
20	004840106	NUT (ALN-4)	

PREFISSO "ZS"
PREFISSO "ZS"

G. BOBBIN WINDER & THREAD TENSION

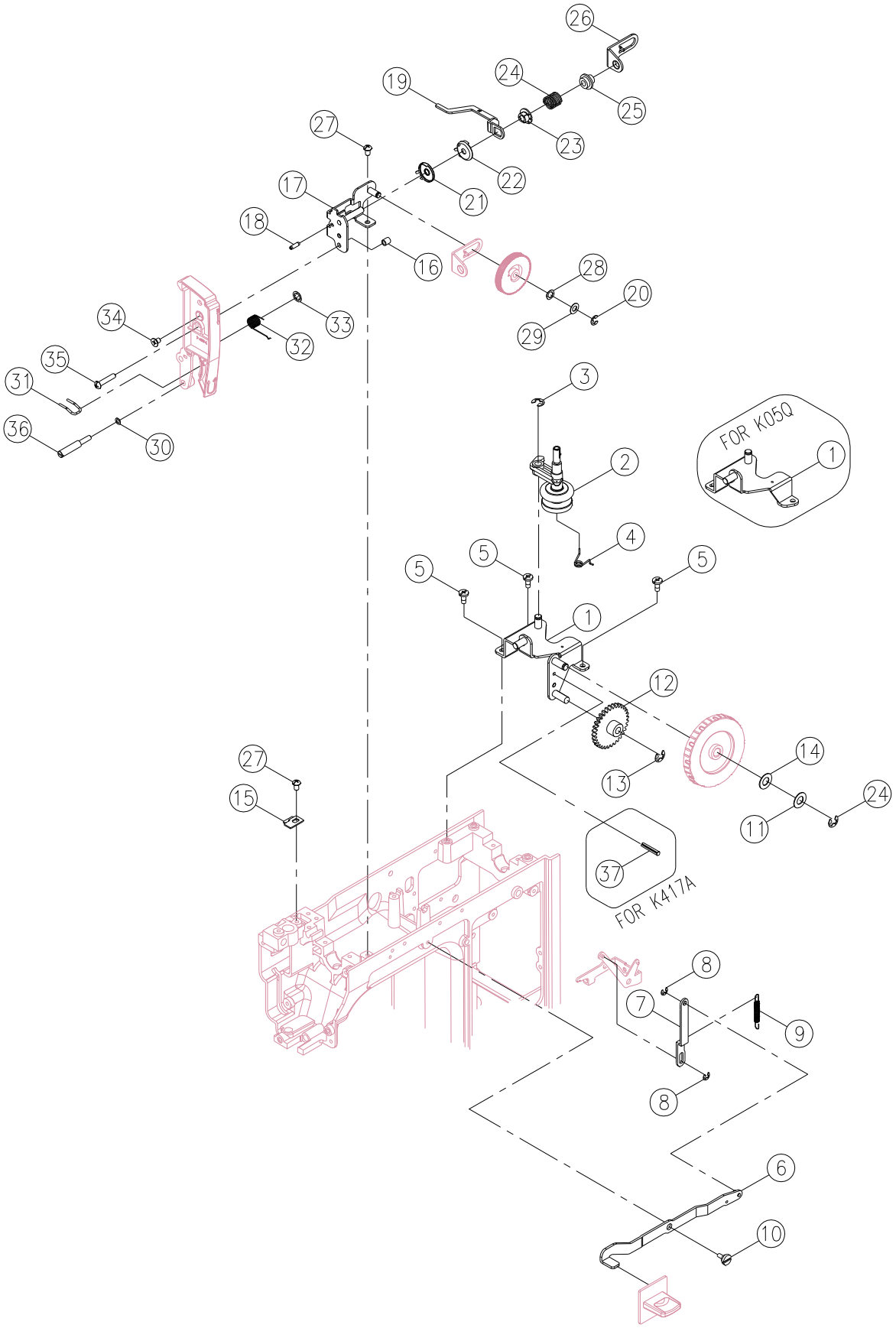

G. BOBBIN WINDER & THREAD TENSION

NO.	PART NO.	DESCRIPTION	REMARK
1	K7Q0025000	BOBBIN WINDER FRAME PLATE CPL.	
2	K6A0555000	BOBBIN WINDER CRANK CPL.	
3	003010053	E-RING (ETW-5)	
4	K6A0573003	BOBBIN WINDER CRANK SPRING	
5	004240106	SET SCREW (M4x8 A)	
6	K6A0853006	REVERSE LEVER	
7	K6A0863003	REVERSE ROD	
8	003010036	E-RING (ETW-3)	
9	M70093000	AUTO THREADED LEVER SPRING	
10	004240883	SET SCREW (M4x6)	
11	004300186	WASHER (6.2x12x0.5)	
12	K6A0823000	FEED REGULATOR GEAR	
13	003010046	E-RING (ETW-4)	
14	004900063	WASHER (6.2x12x2.0 t=0.15)	
15	V880583003	TENSION LEVER REGULATING PLATE	
16	H11103001	DIAL TENSION GUIDE SPRING TUBE	
17	Q6B0086000	DIAL TENSION SUPPORTER PLATE	
18	003043010	SPRING PIN (3x10)	
19	K6D0293006	DIAL TENSION WAFT PLATE	
20	003010043	E-RING (ETW-4)	
21	J30423001	DIAL TENSION DISC (1)	
22	E1A2333001	DIAL TENSION DISC	
23	D6B0623000	DIAL TENSION SPRING REGULATOR	
24	V880593003	DIAL TENSION SPRING	
25	K50193000	DIAL TENSION REGULATOR	
26	V60273006	DIAL TENSION SPRING PLATE	
27	004240056	SET SCREW (M4x6 B)	
28	004500360	WASHER (WW-5)	
29	004300643	WASHER (5.2x10x0.5)	
30	004300136	WASHER (4.2x8x0.8)	
31	P3A1353001	THREAD GUIDE	
32	V60303000	DIAL TENSION SPRING	
33	003020053	CS-RING (CSTW-5)	
34	004240176	SET SCREW (M4x6 D)	
35	004240146	SET SCREW (M4x15 B)	
36	004241412	SET SCREW (M4x0.7 L42)	
37	003043014	SPRING PIN (3x14x0.6)	FOR K417A

PREFISSO "ZS"
PREFISSO "ZS"

H. NEEDLE BAR & PRESSER MECHANISM

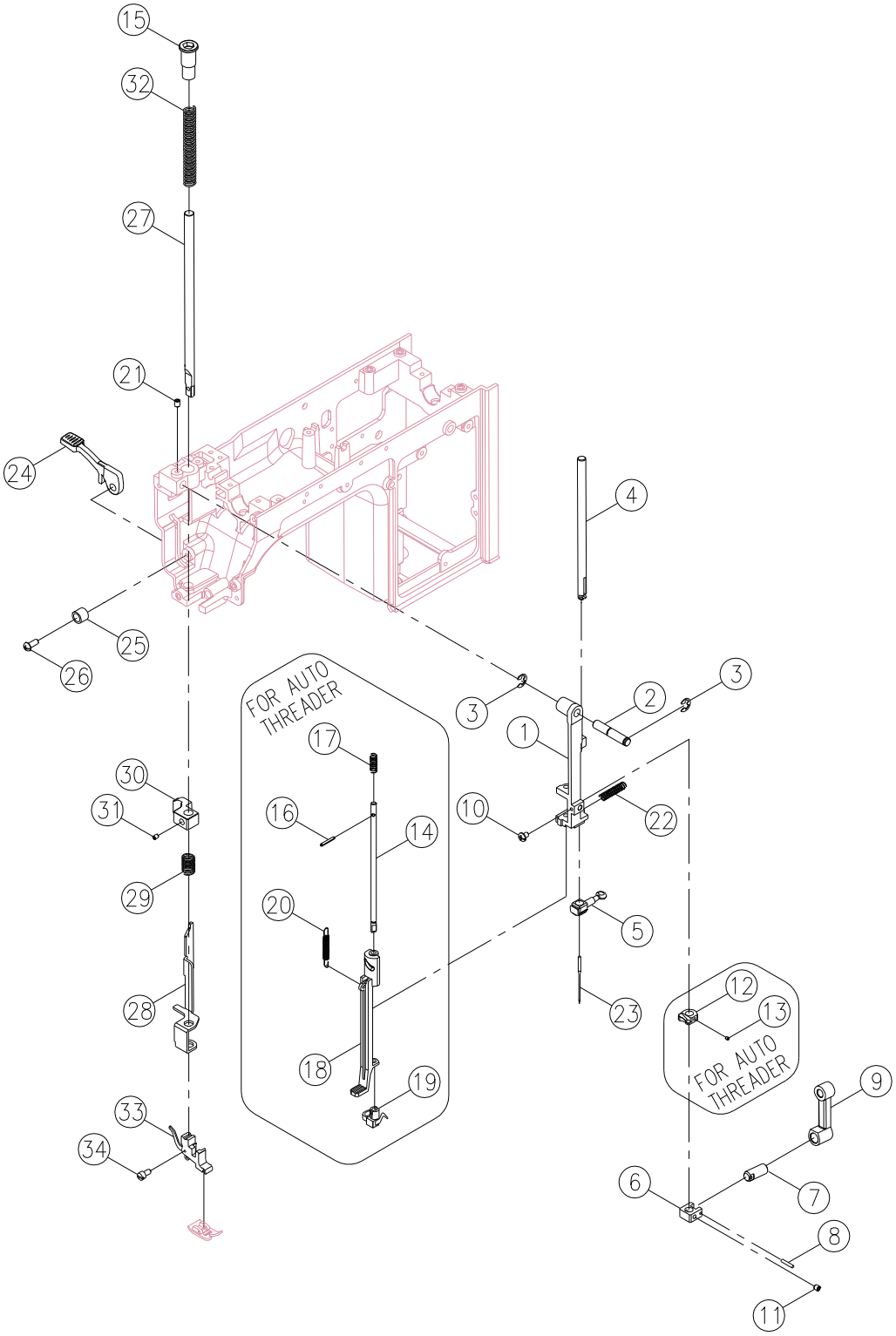

H. NEEDLE BAR & PRESSER MECHANISM

NO.	PART NO.	DESCRIPTION	REMARK
1	V61753002	NEEDLE BAR SUPPORTER	FOR K432A
	V61973002	NEEDLE BAR SUPPORTER	FOR K417A
2	R12723003	NEEDLE BAR SUPPORTER PIN	FOR K432A
	N80223003	NEEDLE BAR SUPPORTER PIN	FOR K417A
3	003010056	E-RING (ETW-5)	
4	V70273000	NEEDLE BAR	
5	TA11034000	NEEDLE CLAMP CPL.	
6	V880393003	NEEDLE BAR BRACKET (1)	
7	V880483000	NEEDLE BAR BRACKET (2)	
8	0030400020	PIN (2x12)	
9	V880633000	NEEDLE BAR CRANK ROD	
10	004106202	SET SCREW (9/64x40x6)	
11	004240503	SET SCREW (M4×4 C)	
12	K7P0143000	AUTO THREADER STOPPER	FOR K432A
13	004230483	SET SCREW (M3x4 C)	FOR K432A
14	K7P0053000	AUTO THREADER SHAFT	FOR K432A
15	Q6G0273000	PRESSER BAR REGULATING SCREW	
16	003042014	SPRING PIN (2x14)	FOR K432A
17	K7P0113003	AUTO THREADER SHAFT SPRING	FOR K432A
18	K7P0063000	AUTO THREADER LEVER	FOR K432A
19	Q6G0225000	AUTO THREADER	FOR K432A
20	M70093000	AUTO THREADER LEVER SPRING	FOR K432A
21	004240033	SET SCREW (M4x5 C)	
22	H50583003	NEEDLE BAR SUPPORTER SPRING	
23	006K6A0005	NEEDLE	
24	K6A1193000	PRESSER BAR LIFTER LEVER	
25	V60163000	PRESSER BAR LIFTER LEVER SCREW WASHER	
26	004240046	SET SCREW (M4x10 B)	
27	V70153002	PRESSER BAR	
28	V880573003	TENSION LEVER LIFTER	
29	H10723003	TENSION LEVER LIFTER SPRING	
30	H10533002	PRESSER BAR BRACKET	
31	004260023	SET SCREW (M6x5 C)	
32	K6E0403003	PRESSER BAR SPRING	
33	006187008	SHANK CPL.	
34	004106221	SHANK SCREW (9/64x40x8)	

PREFISSO "ZS"
PREFISSO "ZS"

I. ZIGZAG MECHANISM

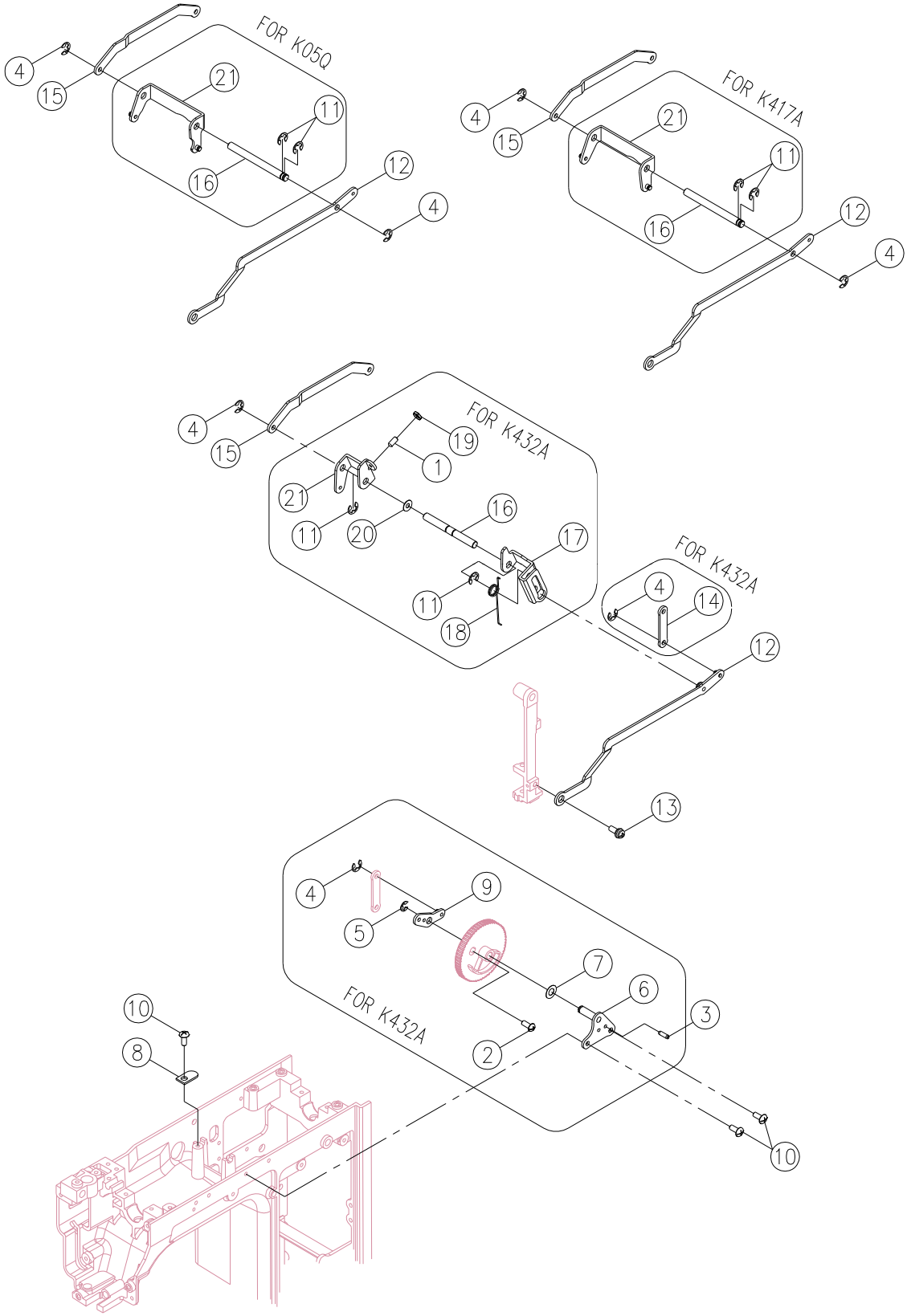

I. ZIGZAG MECHANISM

NO.	PART NO.	DESCRIPTION	REMARK
1	004241093	SET SCREW (M4x9)	
2	0042400286	SET SCREW (M4x10)	
3	003043010	SPRING PIN (3x10)	
4	003010036	E-RING (ETW-3)	
5	003010043	E-RING (ETW-4)	
6	K6A0653006	ZIGZAG WIDTH DIAL PLATE	FOR K432A
7	004500670	WASHER	FOR K432A
8	H13093003	CARRYING HANDLE PLATE	
9	K6B0143006	ZIGZAG WIDTH CRANK	FOR K432A
10	004240106	SET SCREW (M4x8 A)	
11	003010053	E-RING (ETW-5)	
12	V60175003	NEEDLE BAR DRIVING ROD CPL.	FOR K432A
	K3B0023003	NEEDLE BAR DRIVING ROD CPL.	FOR K417A
13	E1A2993000	NEEDLE BAR DRIVING ROD PIN	
14	K6A0683003	ZIGZAG WIDTH CRANK ROD	FOR K432A
15	K6A0623003	ROD	
16	K6A0593003	ZIGZAG CONTACT SUPPORTER SHAFT	FOR K432A
	K3B0063003	ZIGZAG CONTACT SUPPORTER SHAFT	FOR K417A
17	K6A0603003	ZIGZAG WIDTH REGULATING CAM BOX	FOR K432A
18	N7A0853003	ZIGZAG WIDTH SPRING	FOR K432A
19	004840106	NUT (M4x0.7)	
20	004300493	WASHER (14x6.2x3)	FOR K432A
21	K6A0613003	ZIGZAG REGULATOR CRANK	FOR K432A
	K3B0053003	ZIGZAG REGULATOR CRANK	FOR K417A

PREFISSO "ZS"
PREFISSO "ZS"

J. BH MECHANISM & NEEDLE PLATE COMPONENTS

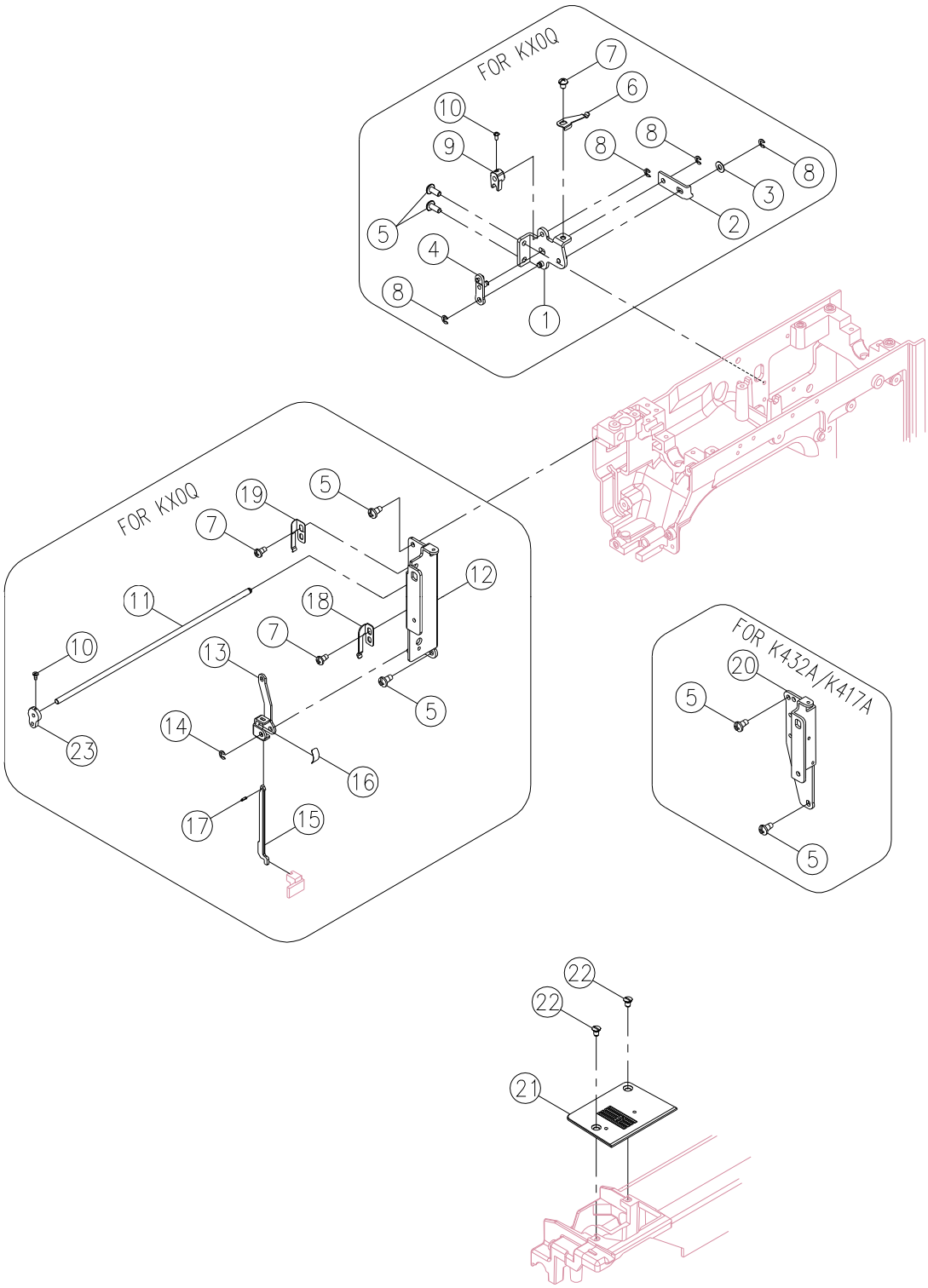

J. BH MECHANISM & NEEDLE PLATE COMPONENTS

NO.	PART NO.	DESCRIPTION	REMARK
1			
2			
3			
4			
5	004240106	SET SCREW (M4x8 A)	
6			
7			
8			
9			
10			
11			
12			
13			
14			
15			
16			
17			
18			
19			
20	K6A5033006	LAMP BRACKET	
21	K6K0433001	NEEDLE PLATE	
22	004240851	NEEDLE PLATE COMPLETE SET SCREW	
23			

PREFISSO "ZS"
PREFISSO "ZS"

K. FEED MECHANISM

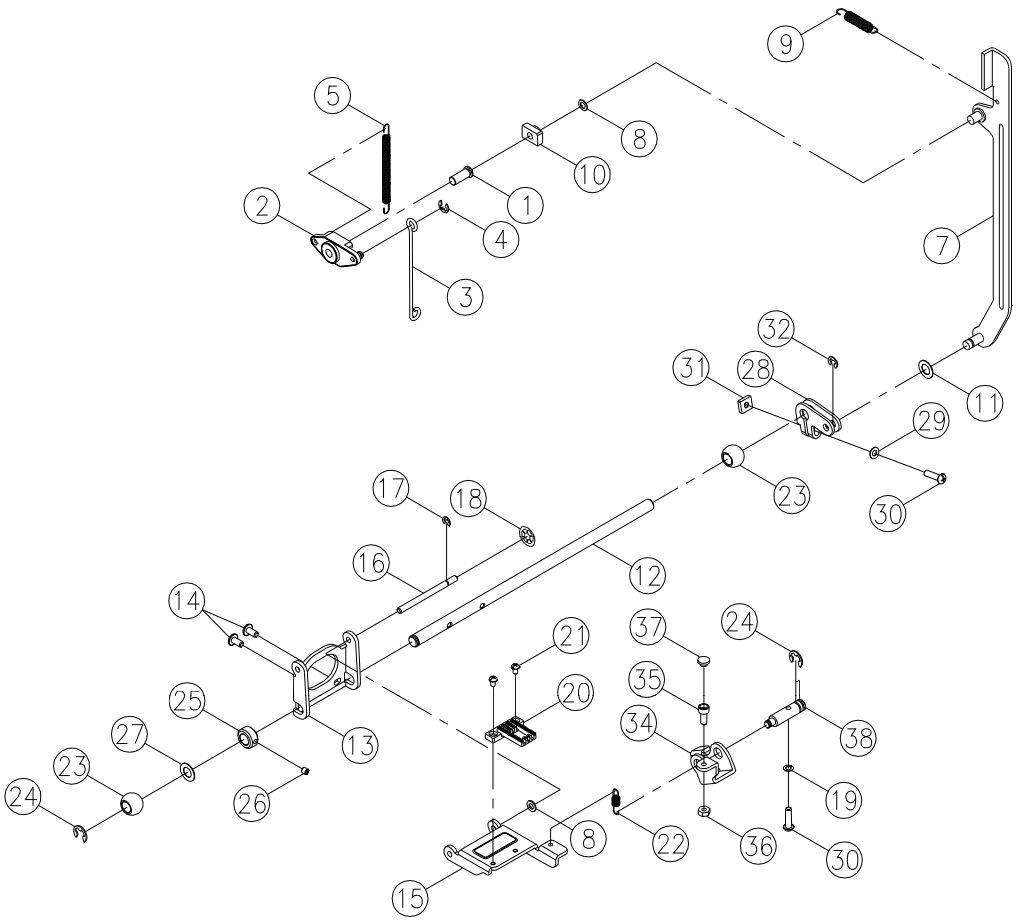

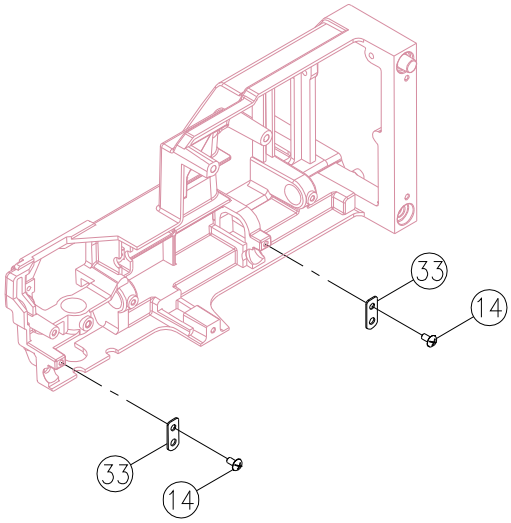

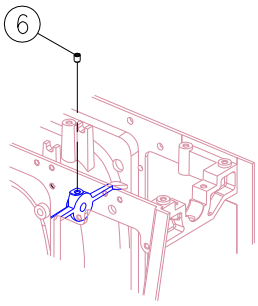

K. FEED MECHANISM

NO.	PART NO.	DESCRIPTION	REMARK
1	K6A0173000	FEED REGULATING SHAFT	
2	K6A0153000	FEED REGULATING	
3	K6A1323003	FEED ROD	
4	003010046	E-RING (ETW-4)	
5	K6A0633003	FEED REGULATING SPRING	
6	004240223	SET SCREW (M4x6 C)	
7	V60453003	FORK ROD	
8	004400180	ENDURE ATTRITION WASHER (5.7x10.2x0.5)	
9	V60463003	FORK ROD SPRING	
10	V11533000	FEED REGULATING BLOCK	
11	004400450	ENDURE ATTRITION WASHER (5.5x12x0.25)	
12	V60483000	FEED ROCK SHAFT	
13	V60493003	FEET ROCK FRAME	
14	004240106	SET SCREW (M4x8 A)	
15	V60503003	FEED DOG FRAME	
16	V60513003	FEED DOG FRAME SHAFT	
17	003010036	E-RING (ETW-3)	
18	003090043	NUT (SPN-4)	
19	004600026	WASHER (4.2x7.2x1.2)	
20	V620053000	FEET DOG	
21	004230056	SET SCREW (M3x5 B)	
22	V60533003	FEED DOG FRAME SPRING	
23	V60343000	FEED ROCK BUSHING	
24	003010063	E-RING (ETW-6)	
25	H11943003	PATTERN CAM SHAFT COLLAR	
26	004240503	SET SCREW (M4x4 C)	
27	004400410	ENDURE ATTRITION WASHER (8.2x12x0.25)	
28	V60553003	FEED ROCK CRANK	
29	004300093	WASHER (4x8x0.5)	
30	004240146	SET SCREW (M4x15 B)	
31	004840073	FEED ROCK CRANK NUT (M4)	
32	003010043	E-RING (ETW-4)	
33	V60563003	BUSHING HOLDER PLATE	
34	V60583003	FEED LIFTING ROCK CRANK	
35	004250323	SEW SCREW	
36	004840022	NUT (M4 t=3)	
37	K81243000	SEW SCREW KNOB	
38	V60593003	FEED LIFTING ROCK SHAFT	

PREFISSO "ZS"
PREFISSO "ZS"

L. HOOK & LOWER SHAFT COMPONENTS

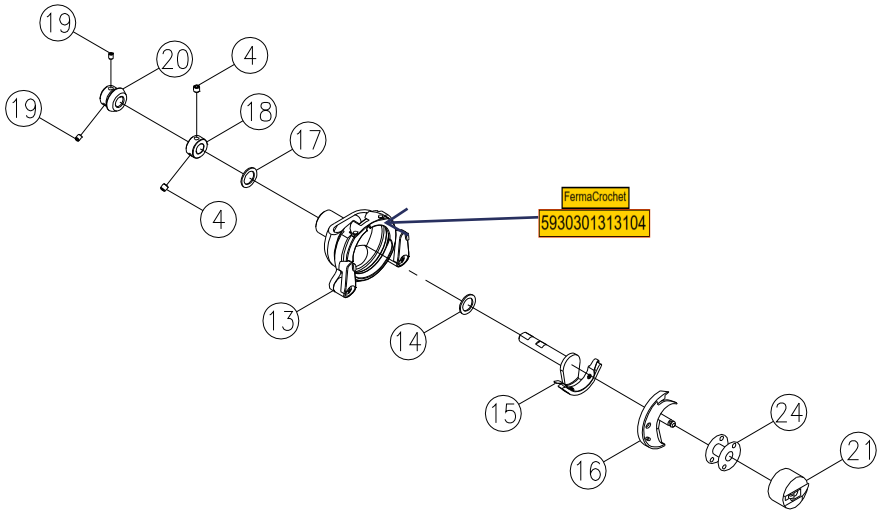

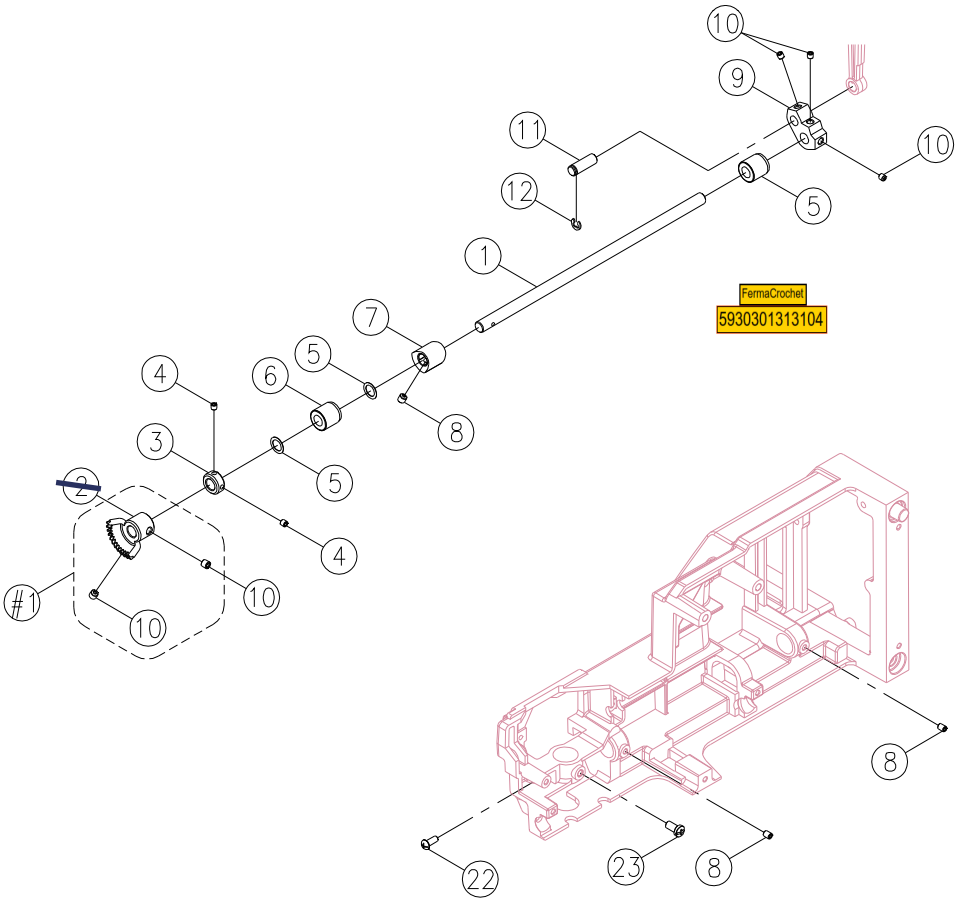

L. HOOK & LOWER SHAFT COMPONENTS

NO.	PART NO.	DESCRIPTION	REMARK
1	M1A0083000	LOWER SHAFT	
~~2~~	~~G4A1573000~~	~~LOWER SHAFT GEAR~~	
3	V11553003	LOWER SHAFT COLLAR	
4	004240503	SET SCREW (M4x4 C)	
5	004400410	ENDURE ATTRITION WASHER (8.2x12x0.25)	
6	E1A0283000	FEED ROCK BUSHING	
7	V6E1123000	FEED LIFTING ROCK CAM	
8	004240223	SET SCREW (M4x6 C)	
9	V60363000	CRANK CONNECTING ROD CRANK	
10	004250203	SET SCREW (M5x5 C)	
11	V10833003	CRANK CONNECTING ROD CRANK PIN	
12	003010053	E-RING (ETW-5)	
13	V10995000	OPEN SHUTTLE RACE CPL.	
14	004400800	ENDURE ATTRITION WASHER (7.6x12x0.13)	
15	K81125000	SHUTTLE DRIVER COMPLETE	
16	V880723000	SHUTTLE HOOK	
17	004400210	ENDURE ATTRITION WASHER (8.2x16x0.5)	
18	H71153003	SHUTTLE DRIVER SHAFT COLLAR	
19	004107293	SET SCREW (11/64x40x4)	
20	G4A1583000	SHUTTLE DRIVER SHAFT GEAR	
21	K7Q0054000	BOBBIN CASE COMPLETE	
22	004240046	SET SCREW (M4x10 B)	
23	004250158	SET SCREW (M5x10 B)	
24	006084009	BOBBIN	
#1	G4A1574000	LOWER SHAFT GEAR CPL.	

PREFISSO "ZS"

PREFISSO "ZS"

M. MOTOR, POWER SUPPLY & ELECTRONIC PARTS

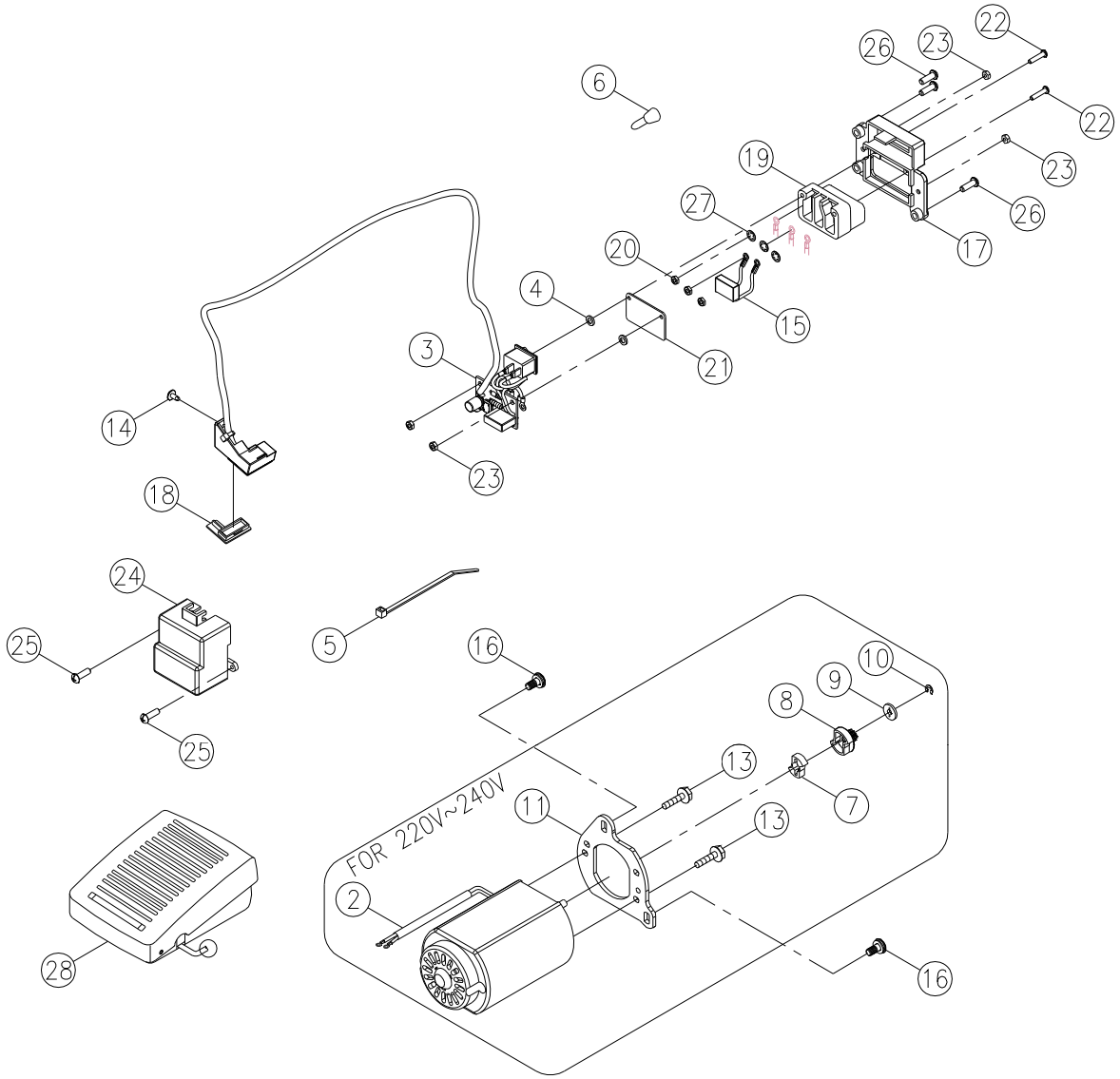

M. MOTOR, POWER SUPPLY & ELECTRONIC PARTS

PREFISSO "ZS"

PREFISSO "ZS"

NO.	PART NO.	DESCRIPTION	REMARK
1			
2	001V881007	MOTOR	
3	VGJ0745000	LED HOLDER CPL.	
4	0040300013	WASHER (3.2x8x3)	
5	002027129	CORD CLIP	
6	AA0463000	END TERMED	
7	008059302	CUSHION RUBBER	
8	002396029	BELT WHEEL	
9	002145029	MOTOR FEED REGULATOR COLLAR	
10	003010036	E-RING (ETW-3)	
11	K6A0983006	MOTOR BRACKET	
12			
13	0042400036	SET SCREW (M4x10.2)	
14	004231016	SET SCREW (M4x5)	
15	008K5L0001	CONDENSER	
16	0042500096	SET SCREW (M5x12)	
17	K6A1203000	RECEPTACLE HOLDER	
18	VGJ0553031	LAMPSHADE	
19	008V540001	RECEPTACLE	
20	0048400001	NUT (M3x4)	
21	008V540002	CONCERT INSULATION PLATE	
22	004230356	SET SCREW (M3x25 B)	
23	004830016	NUT (M3 t=2.3)	
24	K6C0423000	RECEPTACLE HOLDER COVER	
25	004230286	SET SCREW (M3x8 B)	
26	004240146	SET SCREW (M4x15 B)	
27	0030200001	CS (CSTW-3.2)	
28	002V881013	FOOT CONTROLLER	

N. ACCESSORIES (STANDARD)

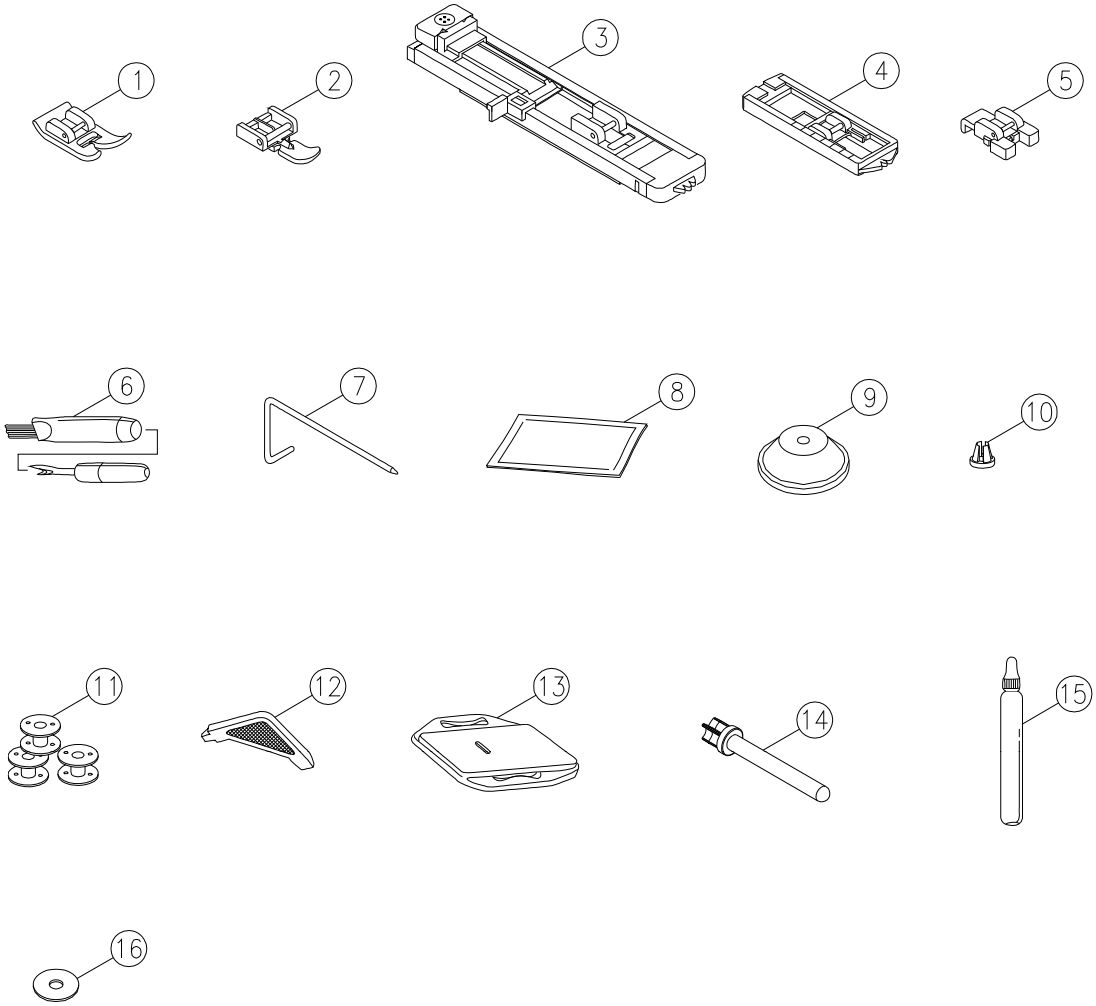

N. ACCESSORIES (STANDARD)

PREFISSO "ZS"

PREFISSO "ZS"

NO.	PART NO.	DESCRIPTION	REMARK
1	006806008	ALL PURPOSE FOOT (J)	
2	006905008	ZIPPER FOOT (I)	
3			
4	006909008	BUTTONHOLE FOOT	
5	006914008	BUTTON SEWING FOOT (H)	
6	006099008	SEAM RIPPER / BRUSH	
7	006008001	EDGE / QUILTING GUIDE	
8	0060A34004	NEEDLE BAG	
9	R12373210	SPOOL HOLDER (LARGE)	
10	TA10943210	SPOOL HOLDER (SMALL)	
11	006084009	BOBBIN	
12	006093009	L-SCREWDRIVER	
13	006117009	DARNING PLATE	
14	H3JY013210	SECOND SPOOL PIN	
15			
16	006015009	SPOOL PIN FELT	